EE106A Discussion 8: Jacobians

{isabella.huang, valmik}@berkeley.edu

1 Overview

Last week, we learned about spatial and body velocity twists between two frames A and B. These velocity twists are useful because they allow us to find the instantaneous velocity of the B frame expressed in both spatial and body coordinates.

$$v_{q_a}(t) \coloneqq \dot{q}_a(t) = \dot{g}_{ab}(t)q_b = \underbrace{\dot{g}_{ab}(t)g_{ab}^{-1}(t)}_{\coloneqq \widehat{V}_{ab}^s} q_a = \widehat{V}_{ab}^s q_a \tag{1}$$

$$v_{q_b}(t) \coloneqq g_{ab}^{-1}(t)v_{q_a}(t) = \underbrace{g_{ab}^{-1}(t)\dot{g}_{ab}}_{\coloneqq \widehat{V}_{ab}^b} q_b = \widehat{V}_{ab}^b q_b \tag{2}$$

Today, we will be thinking of velocities in the context of robotic manipulators. We will be finding the velocities between the fixed frame S and the end effector frame T, $\widehat{V}_{st}^s$ and $\widehat{V}_{st}^b$.

To do so, we will introduce the notion of spatial and body manipulator Jacobians. Then, we will see how these manipulator Jacobians help us detect singular configurations.

2 Adjoint for Twist Coordinate Change

When working with twists, we can transform a twist matrix $\widehat{\xi}$ into a different coordinate system defined by g, so that it becomes $\widehat{\xi}'$

$$\widehat{\xi}' = g\widehat{\xi}g^{-1} \tag{3}$$

In twist coordinates,

$$\xi' = Ad_g\xi \tag{4}$$

3 Spatial Jacobians

3.1 Definition

As before, we have the expression for $\widehat{V}^s_{st}$ as a function of the transformation between S and T:

$$\widehat{V}^s_{st} = \dot{g}_{st}(\theta) g^{-1}_{st}(\theta) \tag{5}$$

In twist coordinates,

$$V^s_{st} = J^s_{st}(\theta)\dot{\theta} \tag{6}$$

where the *spatial manipulator Jacobian* $J^s_{st}(\theta)$ is defined as

$$J^s_{st}(\theta) = \begin{bmatrix} (\frac{\partial g_{st}}{\partial \theta_1})^\vee & \dots & (\frac{\partial g_{st}}{\partial \theta_n})^\vee \end{bmatrix} \tag{7}$$

$$= \begin{bmatrix} \xi_1 & \xi'_2 & \dots & \xi'_n \end{bmatrix} \tag{8}$$

$$\xi'_i = Ad_{(e^{\widehat{\xi}_1\theta_1}\dots e^{\widehat{\xi}_{i-1}\theta_{i-1}})}\xi_i \tag{9}$$

3.2 Interpretation

For some configuration θ, the spatial manipulator Jacobian maps the joint velocity vector $\dot{\theta}$ into the spatial velocity twist coordinates of the end-effector.

The ith column of the spatial Jacobian ξ'_i is equal to the ith joint twist transformed to the current manipulator configuration and written in spatial coordinates.

Problem 1. *Explain how this physical interpretation is true.*
ξ_i is the ith joint twist expressed in the spatial frame in the reference configuration. In its transformed configuration, it undergoes the transformation $e^{\widehat{\xi}_1\theta_1}\dots e^{\widehat{\xi}_{i-1}\theta_{i-1}}$. Applying transformations to twist coordinate vectors requires the adjoint, so $\xi'_i = Ad_{(e^{\widehat{\xi}_1\theta_1}\dots e^{\widehat{\xi}_{i-1}\theta_{i-1}})}\xi_i$.

3.3 How it's used

We can use the spatial Jacobian to compute the instantaneous velocity of a point q attached to the end-effector relative to the spatial frame. This velocity is

$$v_{q_s} = \widehat{V}^s_{st} q_s = (J^s_{st}(\theta)\dot{\theta})^\wedge q_s \tag{10}$$

where q_s is the coordinates of q in the spatial frame.

4 Body Jacobians

4.1 Definition

Now let's look at velocity twists in the body frame rather than in the spatial frame:

$$\widehat{V}^b_{st} = g^{-1}_{st}(\theta)\dot{g}_{st}(\theta) \tag{11}$$

In twist coordinates,

$$V^b_{st} = J^b_{st}(\theta)\dot{\theta} \tag{12}$$

where the *body manipulator Jacobian* $J^b_{st}(\theta)$ is defined as

$$J^b_{st}(\theta) = \begin{bmatrix} \xi_1^\dagger & \xi_2^\dagger & \dots & \xi_n^\dagger \end{bmatrix} \tag{13}$$

$$\xi_i^\dagger = Ad^{-1}_{(e^{\hat{\xi}_{i+1}\theta_{i+1}} \dots e^{\hat{\xi}_n \theta_n} g_{st}(0))} \xi_i \tag{14}$$

4.2 Interpretation

For some configuration θ, the body manipulator Jacobian maps the joint velocity vector $\dot{\theta}$ into the body velocity twist coordinates of the end-effector.

The ith column of the body Jacobian $\xi_i^\dagger$ is equal to the ith joint twist transformed to the current manipulator configuration and written in body coordinates.

Problem 2. *Explain how this physical interpretation is true.*
The claim is that $\xi^\dagger$ is the transformed ξ expressed in T coordinates. The transformed ξ in S coordinates is ξ', so we expect

$$\xi^\dagger = Ad^{-1}_{g_{st}(\theta)} \xi'$$

Using the forward kinematics map that we know and love,

$$\xi^\dagger = Ad^{-1}_{e^{\hat{\xi}_1\theta_1} \dots e^{\hat{\xi}_n \theta_n} g_{st}(0)} \xi'$$

$$\xi^\dagger = Ad^{-1}_{e^{\hat{\xi}_1\theta_1} \dots e^{\hat{\xi}_n \theta_n} g_{st}(0)} Ad_{(e^{\hat{\xi}_1\theta_1} \dots e^{\hat{\xi}_{i-1}\theta_{i-1}})} \xi_i$$

From the linearity of the adjoint transformation (ie. $Ad_{g_1 g_2} = Ad_{g_1} Ad_{g_2}$), terms cancel out and we get

$$\xi^\dagger = Ad_{g_{st}^{-1}(0) e^{-\hat{\xi}_n \theta_n} \dots e^{-\hat{\xi}_i \theta_i}} \xi_i$$

ξ_i is invariant to the ith twist, so

$$\xi_i^\dagger = Ad^{-1}_{(e^{\hat{\xi}_{i+1}\theta_{i+1}} \dots e^{\hat{\xi}_n \theta_n} g_{st}(0))} \xi_i$$

4.3 How it's used

We can use the body Jacobian to compute the instantaneous velocity of a point q attached to the end-effector relative to the body frame. This velocity is

$$v_{q_b} = \widehat{V}^b_{st} q_b = (J^b_{st}(\theta)\dot{\theta})^\wedge q_b \tag{15}$$

where q_b is the coordinates of q in the tool frame.

4.4 Converting between Spatial and Body Jacobians

$$J^s_{st}(\theta) = Ad_{g_{st}(\theta)} J^b_{st}(\theta) \tag{16}$$

Problem 3. *Find the spatial and body manipulator Jacobians for the Stanford manipulator.*

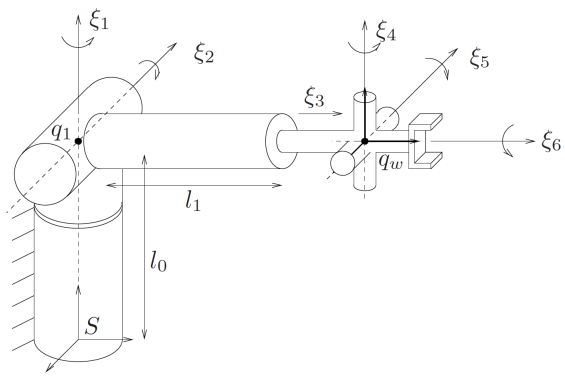

Figure 1: Stanford manipulator

$$J^s_{st}(\theta) = \begin{bmatrix} \xi_1 & \xi'_2 & \dots & \xi'_n \end{bmatrix}$$
$$J^s_{st}(\theta) = \begin{bmatrix} \xi_1 & Ad_{e_1}\xi'_2 & \dots & Ad_{e_1 \dots e_{n-1}}\xi'_n \end{bmatrix}$$

We could solve for the spatial manipulator Jacobian using the adjoint transformations, but we could also transform each twist component individually. So,

$$J^s_{st}(\theta) = \begin{bmatrix} -\omega_1 \times q_1 & -\omega'_2 \times q'_1 & v'_3 & -\omega'_4 \times q'_w & -\omega'_5 \times q'_w & -\omega'_6 \times q'_w \\ \omega_1 & \omega'_2 & 0 & \omega'_4 & \omega'_5 & \omega'_6 \end{bmatrix}$$

where $\omega_1 = \hat{z}$, $\omega'_2 = e^{\hat{z}\theta_1}(-\hat{x})$, $v'_3 = e^{\hat{z}\theta_1}e^{-\hat{x}\theta_2}\hat{y}$, $\dots \omega'_6 = e^{\hat{z}\theta_1}e^{-\hat{x}\theta_2}e^{\hat{z}\theta_4}e^{-\hat{x}\theta_5}\hat{y}$

For the points, $q'_1 = q_1 = \begin{bmatrix} 0 \\ 0 \\ l_0 \end{bmatrix}$, and we can find q'_w in homogeneous coordinates by $\bar{q_w}' = e^{\widehat{\xi_1}\theta_1}e^{\widehat{\xi_2}\theta_2}e^{\widehat{\xi_3}\theta_3}\bar{q_w}$

where $\bar{q_w} = \begin{bmatrix} 0 \\ l_1 \\ l_0 \\ 1 \end{bmatrix}$

To find the body Jacobian, it's more difficult to repeat the same process because the body frame is not stationary, and so these extrinsic transformations we applied to find the ξ'_is can't be used outright. Rather, to find the body Jacobian, we will need to use the conversion equation

$$J^b_{st}(\theta) = Ad_{g^{-1}_{st}(\theta)}J^s_{st}(\theta)$$

When we want to find the manipulator Jacobians for some specific configuration θ_d, it's easier to do it by inspection rather than having to first find the manipulator Jacobians for general θ, then plugging in θ_d. To find cross products, it may be helpful to draw out circles to visualize direction.

Problem 4. *Find the spatial and body manipulator Jacobians for the Stanford manipulator in its initial configuration. In this case, $\theta_d = 0$.*

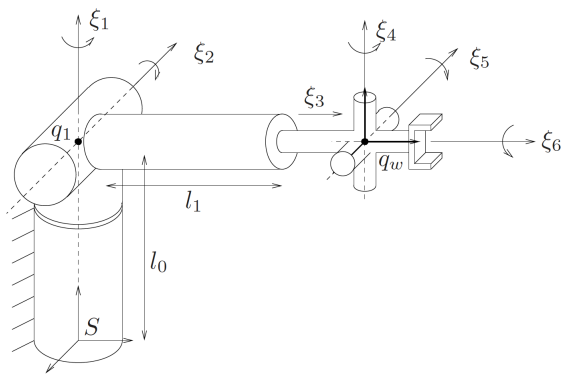

To find the spatial Jacobian, all ξ_i' are equal to ξ_i because we happen to be in the reference configuration.

$$J_{st}^s(\theta_d = 0) = \begin{bmatrix}\xi_1 & \xi_2' & \dots & \xi_n'\end{bmatrix} = \begin{bmatrix}\xi_1 & \xi_2 & \dots & \xi_n\end{bmatrix}$$

We can find all these xi_is as we've learned for forward kinematics, but to calculate $-\omega \times q$ we can actually do it easier by inspection using circles. For each revolute joint, draw a circle perpendicular to the joint axis centered at the axis and passing through the origin of the frame of reference.
Let's try with each of the joints here. Firstly, $\xi_1 = \begin{bmatrix}0 & 0 & 0 & 0 & 0 & 1\end{bmatrix}^T$. Now, let's try the circle method for joint 2. The circle centered at and perpendicular to ω_2 passing through the origin of S instantaneously passes through the origin in the negative y direction. Thus, $v = \omega \times q$ will be non-zero only in the y-component. The magnitude of this component is equal to the perpendicular distance between the $y-$axis and ω_2, which is l_0. Thus, $\xi_2 = \begin{bmatrix}0 & -l_0 & 0 & -1 & 0 & 0\end{bmatrix}^T$.
Joint 3 is prismatic, so $\xi_3 = \begin{bmatrix}0 & 1 & 0 & 0 & 0 & 0\end{bmatrix}^T$.. Doing the circle method for joint 4 allows us to draw a circle in the xy plane which crosses the origin of S in the $+x$ direction. The magnitude of v_x then is the perpendicular distance from the x-axis to w_4, which is l_1, so $\xi_4 = \begin{bmatrix}l_1 & 0 & 0 & 0 & 0 & 1\end{bmatrix}^T$. ξ_5 is probably the hardest twist to find using the circle method. After drawing the circle, we see that at the origin, the instantaneous circle direction is in the yz plane with a negative y and positive z component. The magnitudes of these components are the perpendicular distances between the $y-$ and $z-$ axes to ω_5 respectively (which are l_0 and l_1). Thus, $\xi_5 = \begin{bmatrix}0 & -l_0 & l_1 & -1 & 0 & 0\end{bmatrix}^T$. Finally, $\xi_6 = \begin{bmatrix}-l_0 & 0 & 0 & 0 & 1 & 0\end{bmatrix}^T$.

We repeat the same process for the body Jacobian, except now we define all the twists $\xi^\dagger$ with respect to eh B, which means we can just pretend S doesn't exist. $\xi_1^\dagger = \begin{bmatrix}-l_1 & 0 & 0 & 0 & 0 & 1\end{bmatrix}^T$, $\xi_2^\dagger = \begin{bmatrix}0 & 0 & -l_1 & -1 & 0 & 0\end{bmatrix}^T$, $\xi_3^\dagger = \begin{bmatrix}0 & 1 & 0 & 0 & 0 & 0\end{bmatrix}^T$, $\xi_4^\dagger = \begin{bmatrix}0 & 0 & 0 & 0 & 0 & 1\end{bmatrix}^T$, $\xi_5^\dagger = \begin{bmatrix}0 & 0 & 0 & -1 & 0 & 0\end{bmatrix}^T$, $\xi_6^\dagger = \begin{bmatrix}0 & 0 & 0 & 0 & 1 & 0\end{bmatrix}^T$

5 Singularities

$$V_{st}^s = J_{st}^s(\theta)\dot{\theta}$$

At some configuration θ_s, it may be possible for $J_{st}^s(\theta_s)$ to *not* have full rank. In this case, $J_{st}^s(\theta_s)$ is not invertible, and thus the manipulator is unable to achieve instantaneous motion in certain directions. We call θ_s a *singular configuration*. Since being in singular configurations is not desirable, it's important to figure out what they are for a particular manipulator so they can be avoided.

Problem 5. *Show that a manipulator Jacobian is singular if there exist four revolute joint axes that intersect.* If q is the point at which the axes intersect, we can define S to have its origin at q, since when finding singularities, it doesn't matter where the frame of reference is defined. If there are only four joints in total in the manipulator, we have $J^s \in \mathbb{R}^{6\times 4}$, so the maximal rank of J^s is 4.
Expressing the specific twists,

$$J^s = \begin{bmatrix} 0 & 0 & 0 & 0 \\ \omega_1 & \omega_2 & \omega_3 & \omega_4 \end{bmatrix}$$

which can only have a maximum rank of 3 because not all four ω_i's are linearly independent from each other.

If there are $n \in [5, 6]$ joints in total, the maximal rank of J^s is n. However, there cannot be n linearly independent columns because the first 4 from the intersecting revolute joints are already linearly dependent.

However, if $n > 6$, there is no guarantee that the manipulator is still in a singular configuration, since there may be enough linearly independent columns to achieve the maximal rank of 6.
Problem 6. *When is the elbow manipulator in a singular configuration?*

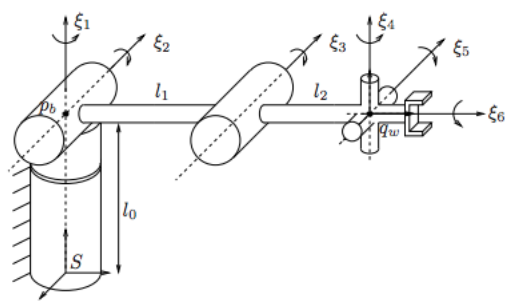

Figure 2: Elbow manipulator

When the wrist is stacked on top of the shoulder.